ISS 40L width/hight/lenght 120/106,4/952,4 cm

Br width/hight/lenght 120,5/107,5 /101cm

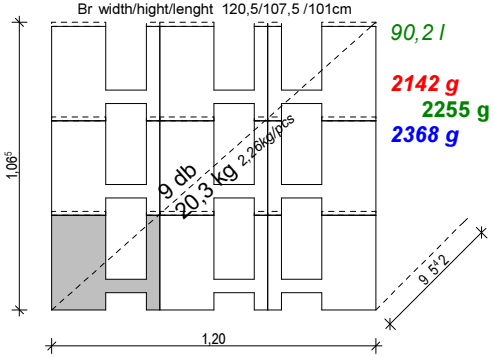

90,2 l

2142 g

2255 g

2368 g

ISS 35L width/hight/lenght 105/106,4/952,4 cm

Br width/hight/lenght 119/107,5/101 cm

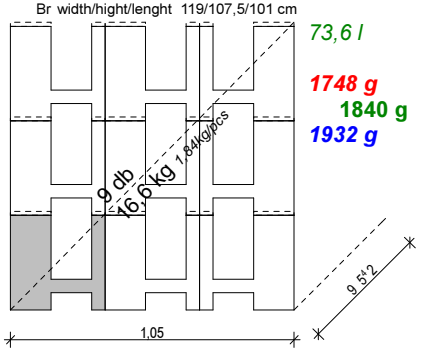

73,6 l

1748 g

1840 g

1932 g

ISS 30L width/hight/lenght 90/106,4/952,4 cm

Br width/hight/lenght 93/107,5/101 cm

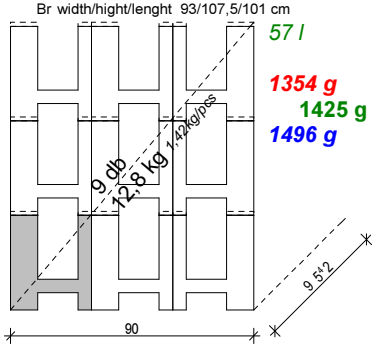

57 l

1354 g

1425 g

1496 g

ISS 25L width/hight/lenght 100/106,4/952,4 cm

Br width/hight/lenght 102/107,5/101 cm

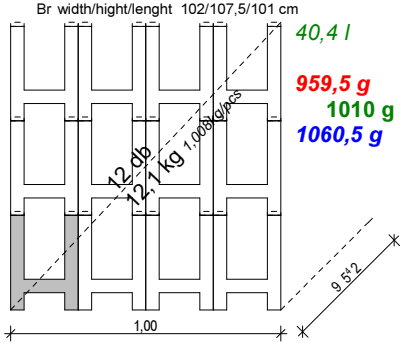

40,4 l

959,5 g

1010 g

1060,5 g

l / db netto

g / db bruttó

+ 640g (5×128g)

ISS 40 *width/hight/lenght 120/106,4/952,4 cm*

Br width/hight/lenght 120,5/107,5/101 cm

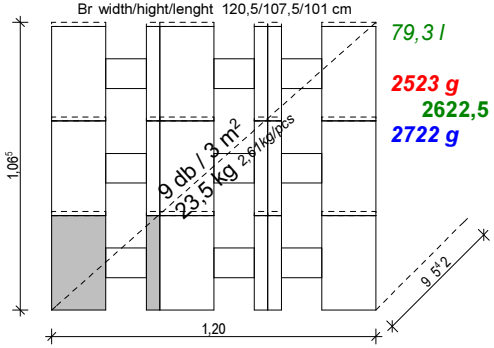

79,3 l

2523 g

2622,5 g

2722 g

ISS 35 *width/hight/lenght 105/106,4/952,4 cm*

Br width/hight/lenght 119/107,5/101 cm

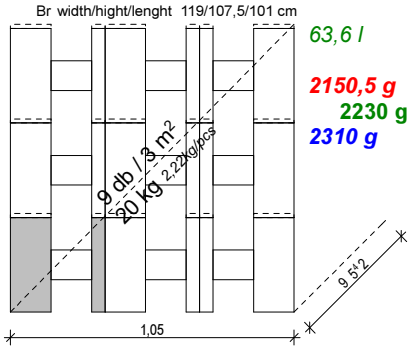

63,6 l

2150,5 g

2230 g

2310 g

ISS 30 *width/hight/lenght 120/106,4/952,4 cm*

Br width/hight/lenght 120,5/107,5/101 cm

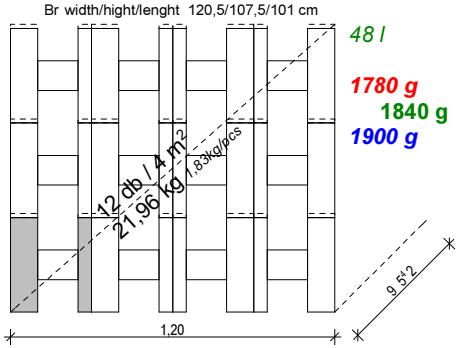

48 l

1780 g

1840 g

1900 g

ISS 25 *width/hight/lenght 100/106,4/952,4 cm*

Br width/hight/lenght 102/107,5/101 cm

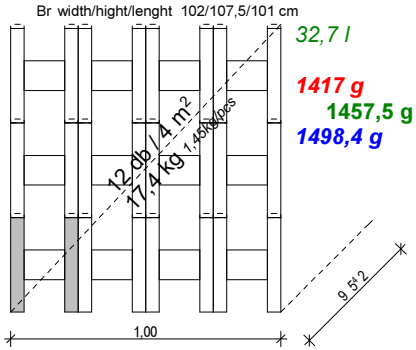

32,7 l

1417 g

1457,5 g

1498,4 g

l / db netto

g / db bruttó

+ 470g (5×94g)

ISS 40RB width/hight/lenght 89/94,5/952,4 cm

Br width/hight/lenght 91/109,5/97 cm

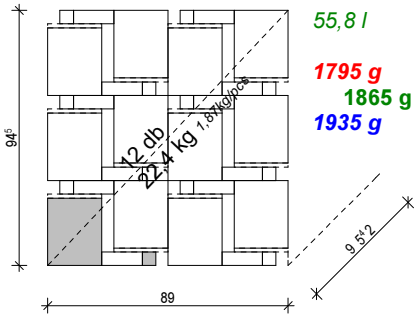

55,8 l

1795 g

1865 g

1935 g

ISS 35RB width/hight/lenght 105/94.5/952,4 cm

Br width/hight/lenght 107/109,5/97 cm

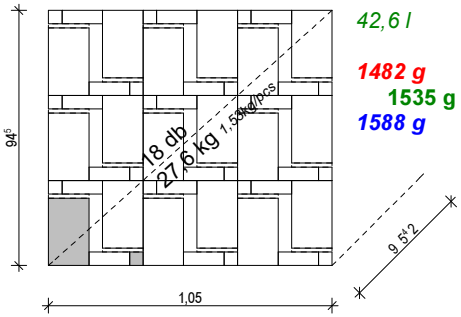

42,6 l

1482 g

1535 g

1588 g

ISS 30RB width/hight/lenght 90/94,5/952,4 cm

Br width/hight/lenght 91,5/109,5/97 cm

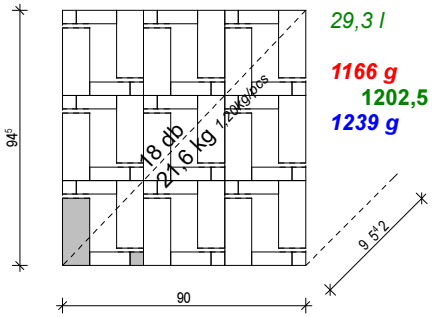

29,3 l

1166 g

1202,5 g

1239 g

ISS 25RB width/hight/lenght 100/94,5/952,4 cm

Br width/hight/lenght 105/109,5/97 cm

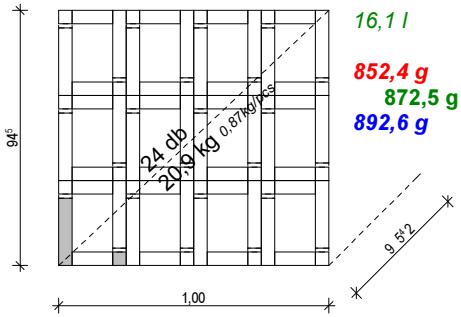

16,1 l

852,4 g

872,5 g

892,6 g

l / db netto

g / db bruttó